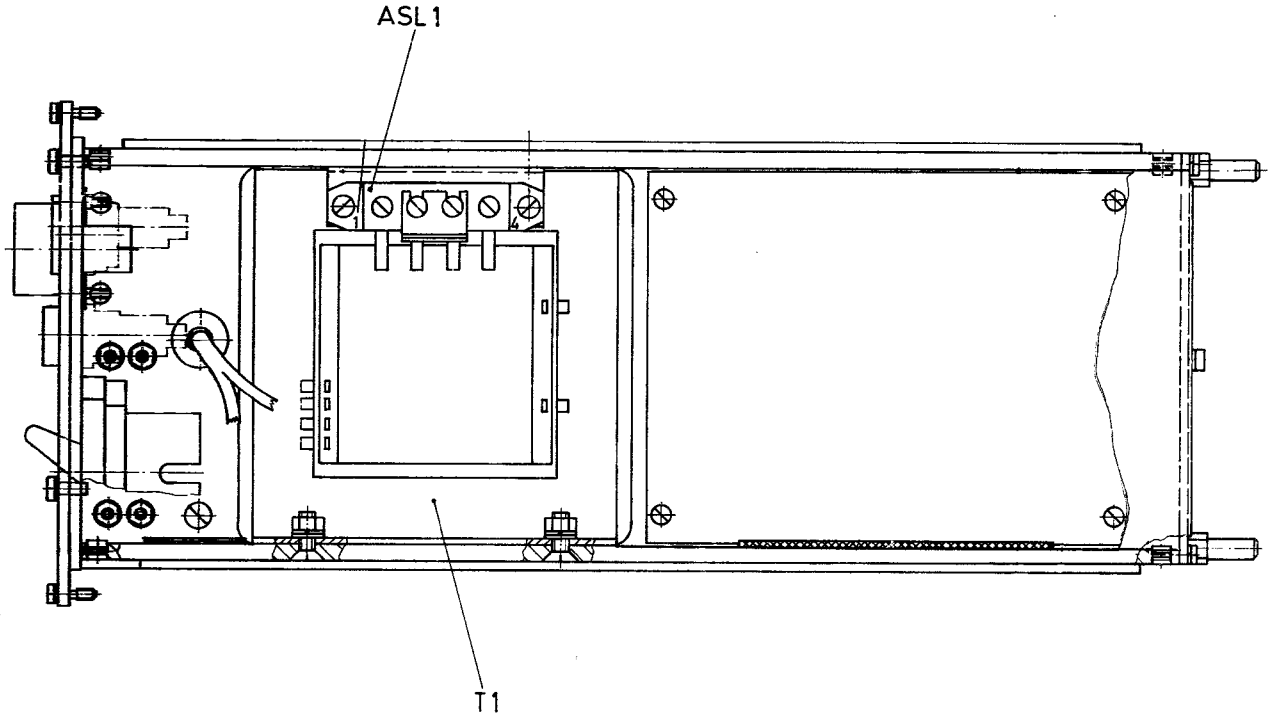

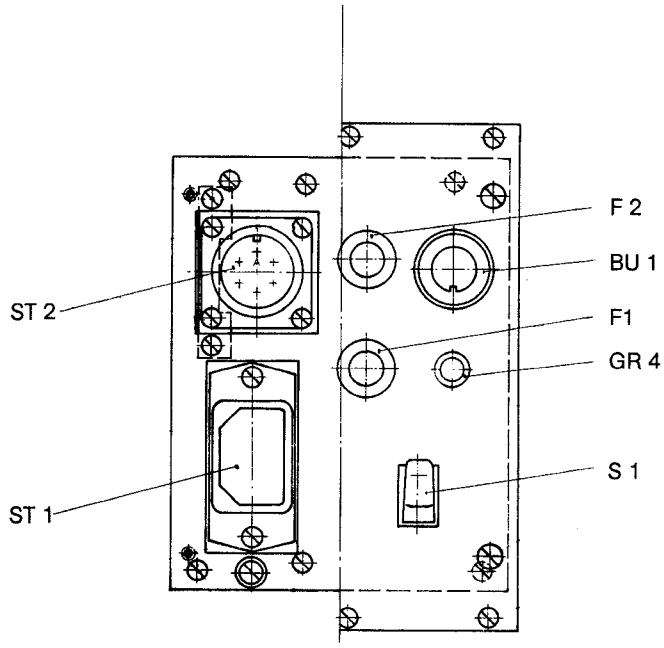

Components Layout
Power Supply SV 1275
Antenna Multicoupler V 1275 H, H–P
Annex 4, Sheet 1